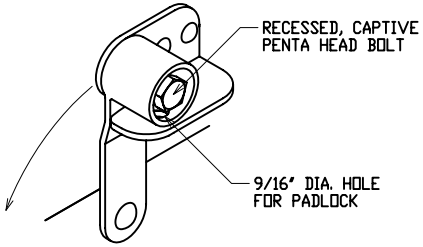

LATCH DETAIL

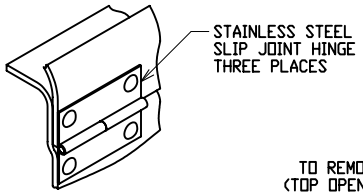

HINGE DETAIL
(TOP CLOSED)

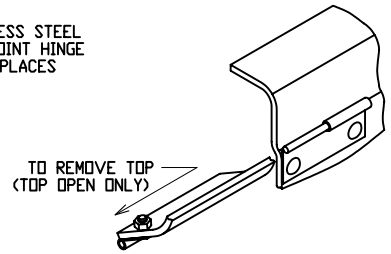

HINGE DETAIL
(TOP OPEN)

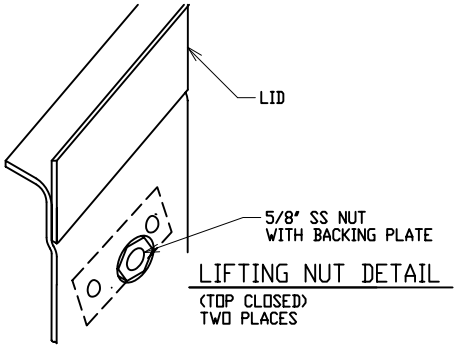

LIFTING NUT DETAIL
(TOP CLOSED)
TWO PLACES

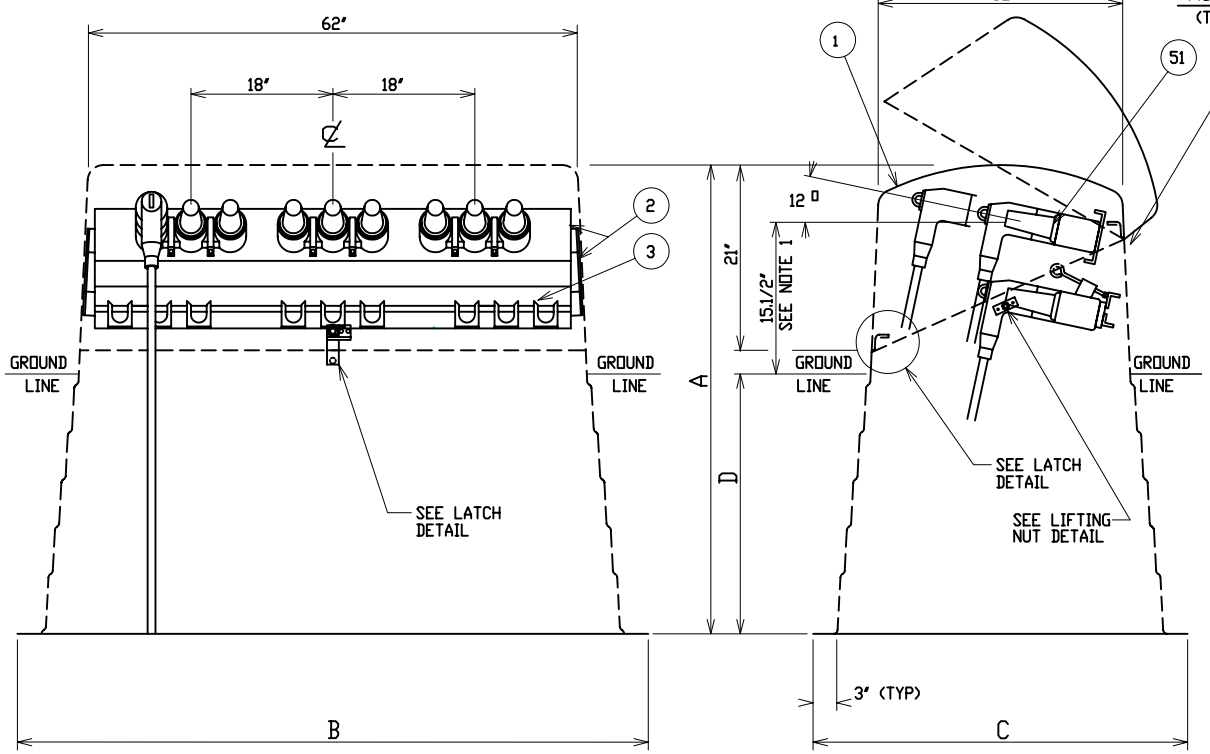

FRONT VIEW

END VIEW

MODEL No.	OVERALL HEIGHT	OVERALL WIDTH AT BOTTOM	OVERALL DEPTH AT BOTTOM	MAXIMUM RECCOMENDED BURIAL DEPTH SEE NOTE 1
	A	B	C	D
CJP-35/B-41	41"	74.1/4"	46.1/4"	17"
CJP-35/B-50	50"	76.1/4"	48.1/4"	26"
CJP-35/B-56	56"	77.3/4"	49.3/4"	32"

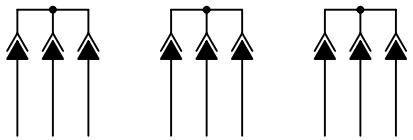

SCHEMATIC

MATERIAL LIST - STANDARD UNIT

ITEM	DESCRIPTION
1	POWER DESIGN INC MODEL NO CJP-35/B FIBERGLASS CABLE JUNCTION PEDESTAL - MUNSELL GREEN
2	ALUMINUM JUNCTION MOUNTING BAR AND PARKING CLIP MOUNTING RAILS
3	ADJUSTABLE LOCATION STAINLESS STEEL PARKING CLIPS

OPTIONAL EQUIPMENT

51	200 AMP LOADBREAK JUNCTION - 35KV - 150KV BIL - SPECIFY MANUFACTURER AND 2 OR 3-WAY

NOTE:

1. ORDERING INFORMATION:

   USER SHOULD SELECT "D", BURIAL DEPTH, DESIRED.
   SPECIFY "A", OVERALL HEIGHT, AS A SUFFIX TO THE BASIC PART NO.
   i.e.; CJP-35/B-50 = 50" OVERALL HEIGHT
   16" TERMINAL HEIGHT MAY BE INCREASED BY DECREASING
   BURIAL DEPTH OR ORDERING THE NEXT SIZE GREATER "A" DIMENSION.

2. MATERIAL:
   1) FIBERGLASS LAMINATE 3/16" NOMINAL THICKNESS
   2) EXTERIOR UV STABILIZED GELCOAT - 14 MIL NOMINAL THICKNESS - WHITE INTERIOR
   3) FIRE RETARDANT - DOES NOT SUPPORT COMBUSTION
   4) STAINLESS STEEL HARDWARE

3. MOUNTING BAR WILL WITHSTAND A MINIMUM 400 LB. LOADING TO INSTALL OR REMOVE ELBOWS.

4. EQUIPMENT SHOWN IS THE LARGEST INTERFACE THREE PHASE RATED. CLEARANCES MAY BE INCREASED WITH OTHER MANUFACTURER'S EQUIPMENT

DEADFRONT CABLE JUNCTION PEDESTAL

35KV 200 AMP 150KV BIL

THREE PHASE 2 OR 3-WAY LOADBREAK JUNCTION

POWER DESIGN INC.
ODELL, OREGON

DRAWN:	PAGE	DATE	DRAWING NO.
RB		3-29-04	3362-R1

FILE REF: